FSLEDH3YW/277

RAB

FSLED Steplights 3W. Suitable for both indoor and outdoor use. Easy installation into a recessed 2" x 4" jbox. Available in vertical or horizontal models either with trims or trimless.

Color: White

Weight: 0.6 lbs

Project:	Type:
Prepared By:	Date:

Driver Info

Type	Constant Current
120V	N/A
208V	N/A
240V	N/A
277V	0.201A
Input Watts	3.7W

LED Info

Watts	3W
Color Temp	3000K (Warm)
Color Accuracy	82 CRI
L70 Lifespan	100,000 Hours
Lumens	99 lm
Efficacy	26.8 lm/W

Technical Specifications

Compliance

UL Listed:
Suitable for wet locations

IP Rating:
Ingress protection rating of IP66 for dust and water

IESNA LM-79 & LM-80 Testing:
RAB LED luminaires and LED components have been tested by an independent laboratory in accordance with IESNA LM-79 and LM-80.

LED Characteristics

LEDs:
Long-life, high-efficacy, surface-mount LEDs

Color Stability:
LED color temperature is warrantied to shift no more than 200K in color temperature over a 5-year period

Color Uniformity:
RAB's range of Correlated Color Temperature follows the guidelines of the American National Standard for Specifications for the Chromaticity of Solid State Lighting (SSL) Products, ANSI C78.377-2017.

Performance

Lifespan:
100,000-Hour LED lifespan based on IES LM-80 results and TM-21 calculations

Wattage Equivalency:
Equivalent to 5W/T3

Construction

Housing:
Precision die-cast aluminum

Trim:
1/2" Trim

Maximum Ambient Temperature:
Suitable for use in up to 40°C (104°F)

Cold Weather Starting:
The minimum starting temperature is -40°C (-40°F)

Lens:
Tempered glass lens

Gaskets:
High-temperature silicone

Finish:
Formulated for high durability and long-lasting color

Green Technology:
Mercury and UV free. RoHS-compliant components.

Installation

Mounting:
Recessed junction box. Horizontal models.

Other

Warranty:
RAB warrants that our LED products will be free from defects in materials and workmanship for a period of five (5) years from the date of delivery to the end user, including coverage of light output, color stability, driver performance and fixture finish. RAB's warranty is subject to all terms and conditions found at rablighting.com/warranty.

Electrical

THD:
27.6% at 277V

Power Factor:
96.4% at 277V

Copyright © 2025 RAB Lighting All Rights Reserved Note: Specifications are subject to change at any time without notice

FSLEDH3YW/277

RAB

Dimensions

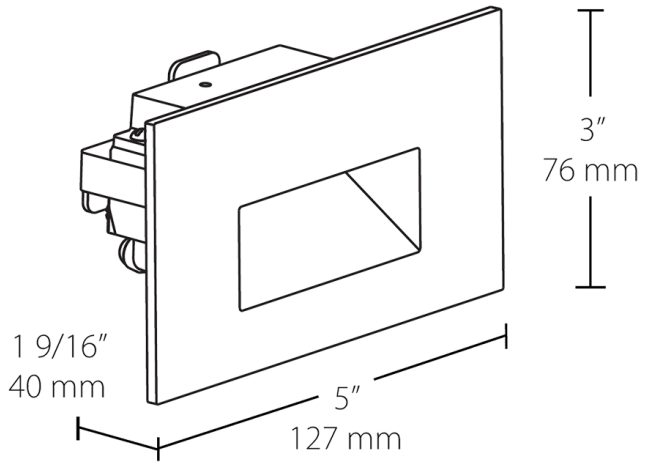

Features

- Easy installation into a recessed 2" x 4" job
- Deep regress of light source eliminates glare
- Concealed hardware for a clean, sophisticated look
- Suitable for both indoor and outdoor use
- 5-Year, No-Compromise Warranty

Ordering Matrix

Family	Orientation	Wattage	Color Temp	Finish	Driver	Trim Options
FSLED	H	3	Y	W	/277	
	H = Horizontal **V =** Vertical	**3 =** 3W	**N =** 4000K Neutral **Y =** 3000K Warm **YY =** 2700K Residential Warm	**Blank =** Bronze **W =** White **B =** Black **S =** Matte Silver	**/120 =** 120V **/277 =** 277V	**Blank =** Surface Plate **/TL =** Trimless Mount

Copyright © 2025 RAB Lighting All Rights Reserved Note: Specifications are subject to change at any time without notice