# PIVOTMB

RAB

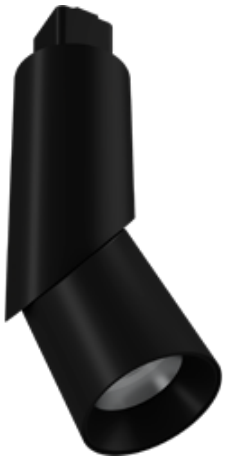

Color: Black

Weight: 1.6 lbs

**Project:**

**Type:**

**Prepared By:**

**Date:**

## Driver Info

| | |
|---|---|
| Type | Constant Current |
| 120V | 0.08A/0.07A/0.05A |
| 208V | 0.00A/0.00A/0.00A |
| 240V | 0.00A/0.00A/0.00A |
| 277V | 0.00A/0.00A/0.00A |
| Input Watts | 5.7-9.9W |

## LED Info

| | |
|---|---|
| Watts | 10/8/06W |
| Color Temp | 2700K/3000K/3500K/4000K/5000K |
| Color Accuracy | 93-96 CRI |
| L70 Lifespan | 100,000 Hours |
| Lumens | 493-890 lm |
| Efficacy | 81.8-94.4 lm/W |

## Technical Specifications

### Field Adjustability

**Field Adjustable:**
Field Adjustable Light Output:
10/8/6W (factory default 10W)
Color Temperature Selectable:
2700K, 3000K, 3500K, 4000K and 5000K (factory default 4000K)

### Compliance

**UL Listed:**
Suitable for dry locations

**IP Rating:**
IP20

### LED Characteristics

**LEDs:**
Long-life, high-efficacy, COB (Chip on Board) LEDs

**Color Temperature:**
2700/3000/3500/4000/5000K CCT Adjustable

### Electrical

**Driver:**
Constant Current, Class 2, 120V, 60 Hz, 120V
10W: 0.10A
8W: 0.08A
6W: 0.06A

**Dimming Driver:**
120V TRIAC Dimmers

**Aux Power Supply:**
No

**Dim to Off:**
No

**Surge Protection:**
Ring Wave L-N:2.5 kV, LN-PE 2.5 kV

### Construction

**Cold Weather Starting:**
The minimum starting temperature is -4°F (-20°C)

**Maximum Ambient Temperature:**
Suitable for use in up to 104°F (40°C)

**Housing:**
Aluminum

**Reflector:**
Polycarbonate

**Finish:**
Formulated for high durability and long-lasting color

### Performance

**Lifespan:**
100,000-Hour LED lifespan based on IESlm-80 results and TM-21 calculations

### Installation

**Mounting:**
H-Track Mount

### Optical

**Optics:**
36°

### Other

**5-Year Limited Warranty:**
The RAB 5-year, limited warranty covers light output, driver performance and paint finish. RAB's warranty is subject to all terms and conditions found at rablighting.com/warranty.


Copyright © 2026 RAB Lighting All Rights Reserved Note: Specifications are subject to change at any time without notice

## Dimensions

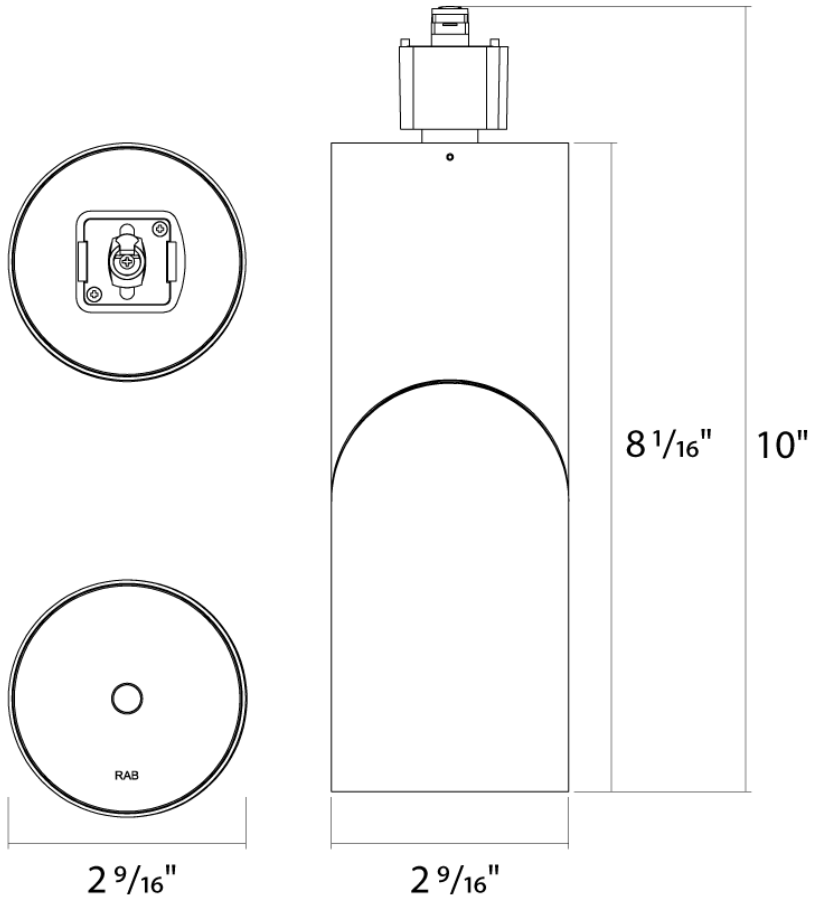


## Ordering Matrix

| Family | Size/Wattage | Mounting | Color Temp | Optics | Finish | Driver |
|---|---|---|---|---|---|---|
| PIVOT | M | | Blank | | B | |
| | **S** = 8W<br>**M** = 10/8/06<br>**L** = 20/15/10 | **Blank** = H-Track Mount | **Blank** = 3000/4000/5000K CCT Adjustable<br>**Blank** = 2700/3000/3500/4000/5000K CCT Adjustable | **Blank** = 36°<br>**24D** = 24° | **Blank** = White<br>**B** = Black | **Blank** = 120V, TRIAC Dimming |


Copyright © 2026 RAB Lighting All Rights Reserved Note: Specifications are subject to change at any time without notice